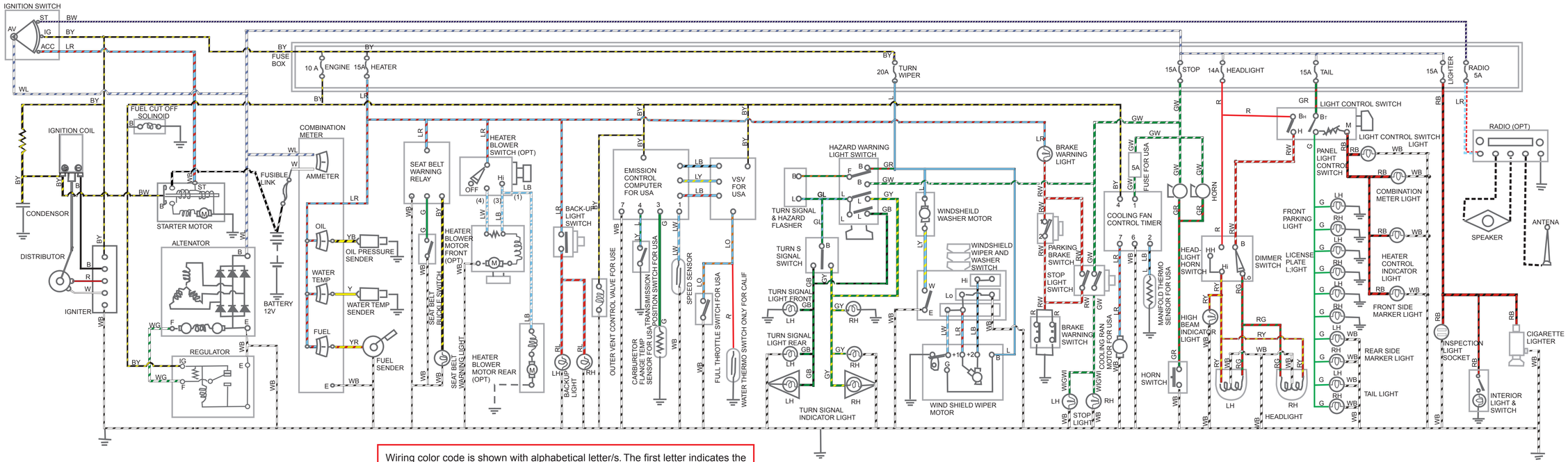

Wiring color code is shown with alphabetical letter/s. The first letter indicates the basic color for the wire, and the second letter indicates the spiral line color.

B = Black	Lg = Light Green
Br = Brown	O = Orange
G = Green	R = Red
Gr = Gray	W = White
L = Light Blue	Y = Yellow

Example: RG is for Red and a Green line.